ECDIS

NES-3000

- Compliant with the latest IEC 61174 & IEC 62288 standard
- Compatible with IHO ENC general format
- Up to 8 NMEA standard ports and easy to connect with sensors
- Multi-size Displays to satisfy different vessels
- Compatible with UKHO AIO data
- Compatible with AIS & ARPA Radar overlay display
- Type approved by CCS and RS



MAIN UNIT



TRACKBALL & KEYBOARD



DISPLAY UNIT 19 inch



DISPLAY UNIT 24 inch

NES-3000 ECDIS is designed for international-voyage vessels to display vessel information received from onboard sensors such as GPS, Gyro, Log, radar and AIS together with geographical information retrieved from Electronic Charts.NES-3000 is a core navigation tool that meets the marine standards ECDIS (Electronic Chart Display Information System) and RCDS (Raster Chart Display System). NES-3000 is designed to run under Microsoft Windows Operating Systems.

NES-3000 conforms to IMO MSC.232 (82), IMO MSC.191 (79), IEC 61174 (2015) standard, etc.

CCS RS COLOR DISPLAY

FEATURES

- Compliant with IHO S52 Standard；
- ENC Display, illimitable zoom；
- MS Windows OS, operate convenient；
- NMEA port×8, RS232 port×2；
- Aluminum case used；
- Table or flush mounting for display unit；
- Navlog inside for non-paper log record；
- CPA/TCPA calculate；
- Multi-route design.

EQUIPMENT LIST

- **STANDARD**
  - Main Unit
  - Display Unit (19 inch or 24 inch)
  - Trackball & Keyboard
  - Recover USB Disk
  - User Manual
  - Install Materials
- **OPTIONS**
  - UPS

SIZE DIMENSION

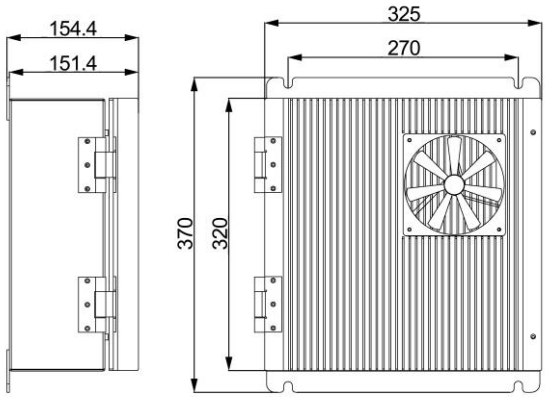

MAIN UNIT

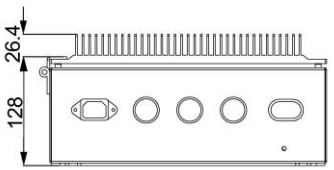

DISPLAY UNIT 19 inch

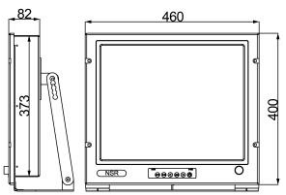

DISPLAY UNIT 24 inch

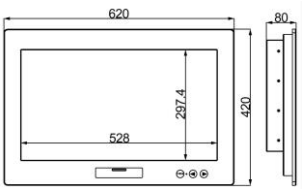

SPECIFICATIONS

- **DISPLAY UNIT**
  - Resolution: 1280×1024, 1920×1080
  - Display Size: ≥19 inch
  - Protected Glass: Bonding Glass
  - Weight: ≥14 kg
- **OPERATION UNIT**
  - Operation Method: Trackball, Keyboard
- **S/W**
  - OS: Windows
  - ENC Update: USB
- **MAIN UNIT**
  - H/W: Intel Core i5
    8G DDR4 RAM
    Dual H/D 64G SSD & 32G SSD
    USB×4，LAN×2
    NMEA×8, RS232×2
  - Power Supply: AC110 V/220 V
  - Size: 325 (W)×370 (H)×154.4 (D) mm
  - Weight: 12 kg
  - IP Grade: IP22

※ *Specifications subject to change without notice*